Cheemi Technology Co., Ltd

DATA SHEET
Hall Effect Current Sensor

PN: PTCHB_LFT15D100S | **I_{PN}=200~500A**

Feature

- Closed- loop (compensated) current transducer
- Supply voltage: DC ±15~24V
- Capable measurement of currents: DC, AC,pulse with galvanic isolation between primary circuit and secondary circuit.
- Molex 4.2mm 2*2P

Advantages

- High accuracy
- Very good linearity
- Easy installation
- Can be customized
- Low temperature drift
- Optimized response time
- High immunity to external interference

Applications

- The application of variable frequency electrical appliances
- AC/DC variable-speed drive
- Uninterruptible Power Supplies (UPS)
- Switched Mode Power Supplies (SMPS)
- Inverter applications

CE RoHS

Electrical data: （Ta=25°C，Vc= ±15VDC）

Parmeter \ Ref	PTCHB200LFT15D100S	PTCHB300LFT15D100S	PTCHB500LFT15D100S
Rated input Ipn(A)	200	300	500
Measuring range Ip(A)	0 ~ ±628	0 ~ ±940	0 ~ ±1570
Turns ratio Np/NS (T)	1:2000	1:3000	1:5000
Output current rms IS(mA)	Ip/Ns (±100)	Ip/Ns (±100)	Ip/Ns (±100)
Secondary coil resistance RS (Ω)	21	31	52
Inside resistance RM (Ω)	$R_{M\,max} = N_S \frac{Vc_{min} - 0.5\,V}{I_P} - R_{S\,max} - 1.1\,\Omega$		
Supply voltage VC(V)	(±15 ~ ±24) ±5%		
Accuracy XG(%)	@I_{PN},T=25°C	< ±0.2	
Offset current IOE(mA)	@I_P=0,T=25°C	< ±0.2	
Temperature variation of IOE IOT(mA/°C)	@I_P=0,-40 ~ +85°C	< ±0.5	
Linearity error εr(%FS)	< 0.1		

Di/dt（A/μs）		> 100
Response time tra(μs)	@90% of I_{PN}	< 1.0
Power consumption IC(mA)		20+Is
Bandwidth BW(KHZ)	@-3dB,I_{PN}	DC-150
Insulation voltage Vd(KV)	@50/60Hz, 1min,AC	6.0

General data:

Parameter	Value
Operating temperature TA(°C)	-50~ +85
Storage temperature TS(°C)	-55~ +125
Mass M(g)	300
Plastic material	PBT G30/G15, UL94- V0;
Standards	IEC60950-1:2001
	EN50178:1998
	SJ20790-2000

Dimensions(mm):

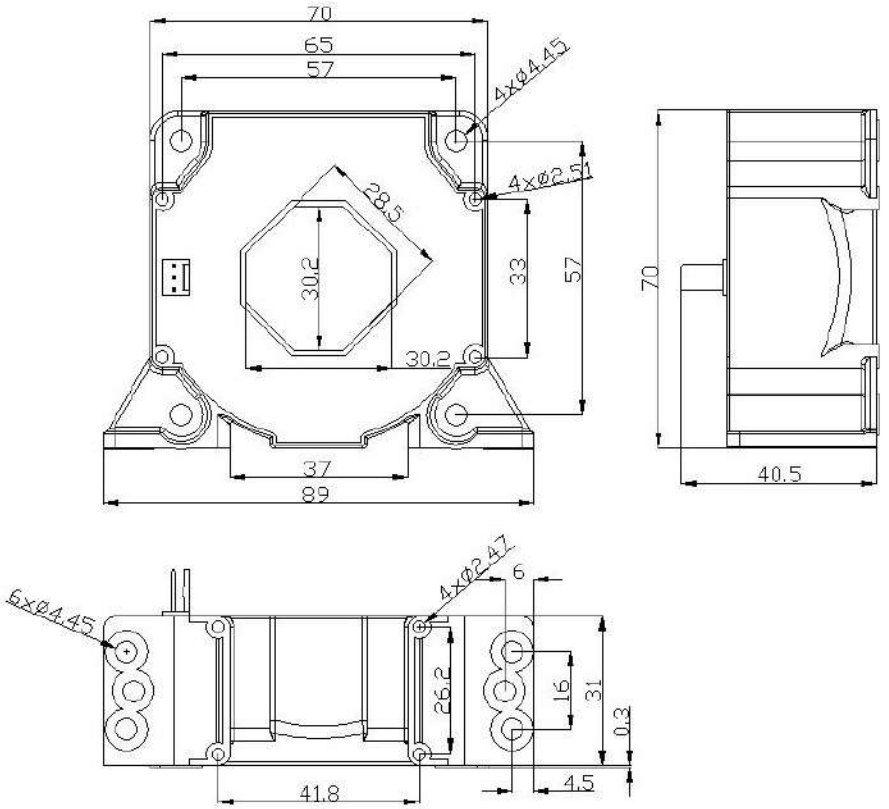

Connection

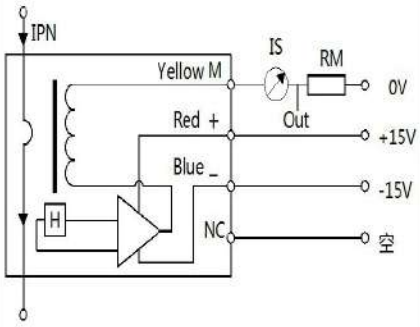

General tolerance

General tolerance:< ±0.5mm

Primary through-hole: D 28±0.2

Connection of Secondary :
Molex 6410

Remarks:

- When the current goes through the primary pin of a sensor, the voltage will be measured at the output end.
- Custom design is available for the different rated input current and the output voltage.
- The dynamic performance is the best when the primary hole if fully filled with.
- The primary conductor should be <100°C.